仅供参考

REV.	REVISION RECORD	DATE
A0	新图面发行	2017.06.16

Specifications:

Contact resistance:≤20mΩ
Insulation resistance:≥100MΩ
Rated voltage:125V AC DC
Rated current:1.0A AC DC
Withstand Voltage: 500V AC/minute
Temperature Range:-25℃~ +85℃

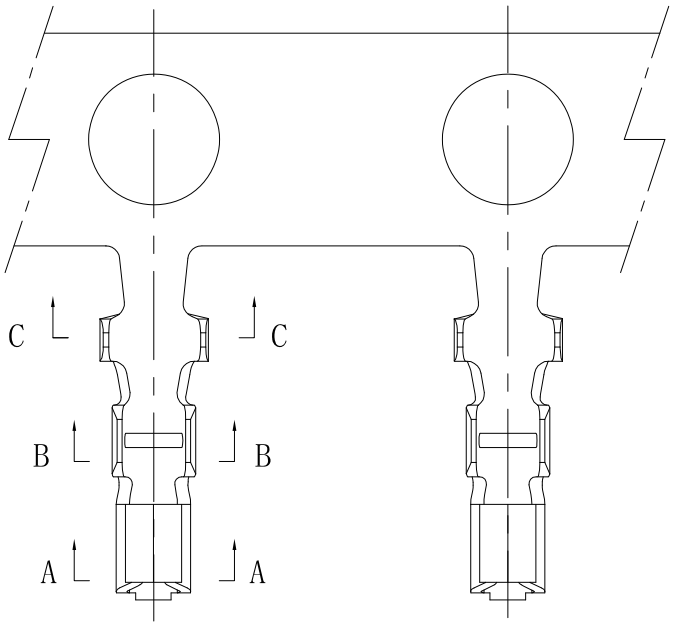

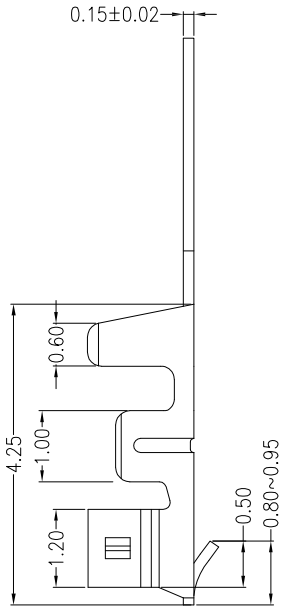

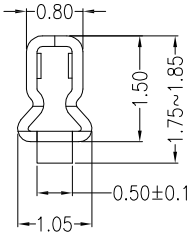

A—A

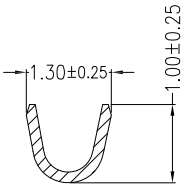

B—B

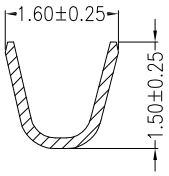

C—C

Wire Range	Insulation O.D.	Material	Finish	Qty/Reel
AWG #28~#32	0.90mm(max)	Phosphor bronze	Tin-plated	/

GENERAL TOLERANCES		
	LINEAR	ANGLES
	0.0±0.30	X° REF±6°
UNIT: MM	0.00±0.20	X° ±3°
SIZE: A4	0.000±0.10	X° X'±2°

SCALE: 1:1	NAME	DATE
APPROVED		
DESIGNER		
DRAWN	肖坤权	2017.06.16

深圳市思拓展电子有限公司
SHENZHEN SINOTOP ELECTRONICS CO.,LTD
公司网址: WWW.szsituo.cn 公司电话: 0755-23765350
邮 箱: 2850175982@qq.com 公司传真: 0755-23765341

TITLE: 1.50mmPITCH TERMINAL

PART.NO: ST-WF-150-001T

DWG.NO:

REV: A0 SHEET: 1/1