仅供参考

REV.	REVISION RECORD	DATE
A0	新图面发行	2017.06.16

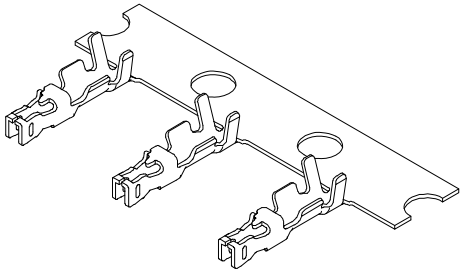

主要技术参数
Main Specifications

线数(poles):2 to 30P
额定电流(Current rating): 1.0A AC,DC
额定电压(Voltage rating): 150V AC,DC
温度范围(Temperature range): -25°C to +85°C
接触电阻(Contact resistance): ≤30mΩ
绝缘电阻(Insulation resistance): ≥500MΩ
耐电压(Withstand voltage): 500V AC/minute
适用线规(Applicable wire): AWG #32 to #28

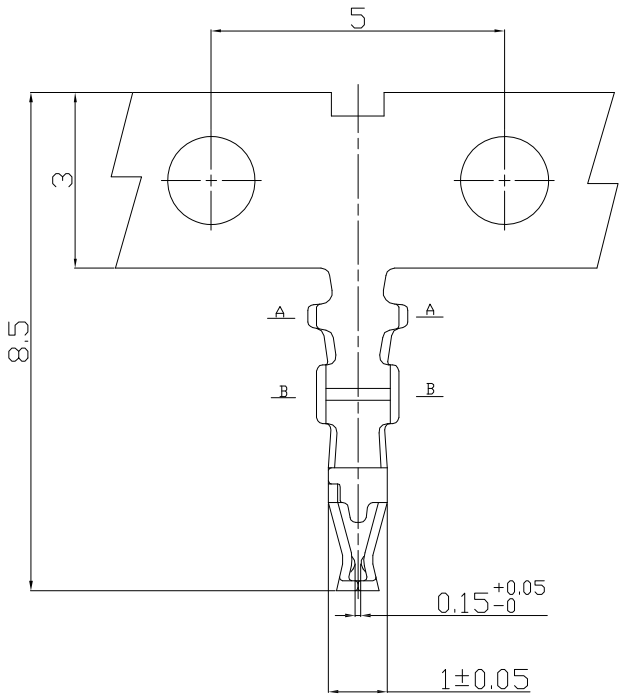

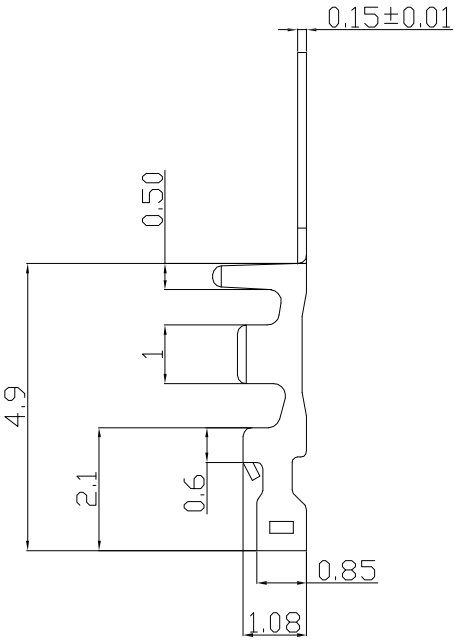

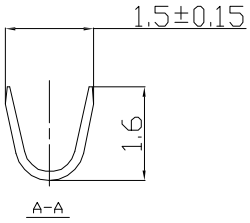

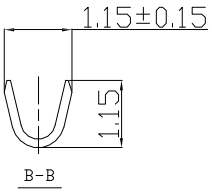

Wire Range	Insulation O.D.	Material	Finish	Qty/Reel
AWG #32 to #28		Phosphor bronze	Tin-plated	12000PCS/Roll (1盘)

	GENERAL TOLERANCES		SCALE: 1:1	NAME	DATE
	LINEAR	ANGLES	APPROVED		
	0.0±0.30	X° REF±6°	DESIGNER		
UNIT: MM	0.00±0.20	X° ±3°			
SIZE: A4	0.000±0.10	X° X'±2°	DRAWN	肖坤权	2017.06.16

深圳市思拓展电子有限公司
SHENZHEN SINOTOP ELECTRONICS CO.,LTD
公司网址: WWW.szsituo.cn 公司电话: 0755-23765350
邮 箱: 2850175982@qq.com 公司传真: 0755-23765341

TITLE: 1.25mmPITCH TERMINAL

PART.NO: ST-WF-125-006T
DWG.NO:
REV: A0 SHEET: 1/1